Kensington

25 073 Roman tub filler with hand shower

Description

79" Hose
GROHE SilkMove® Ceramic Cartridges
1/2" Valves
10" Diverter Spout
Swarovski® Crystal Handles (sold separately)

Flow Rate

13.2 GPM

Code Compliance

ASME/ANSI A112.18.1M

Available Finishes

000 Starlight® Chrome
EN0 Infinity Brushed Nickel

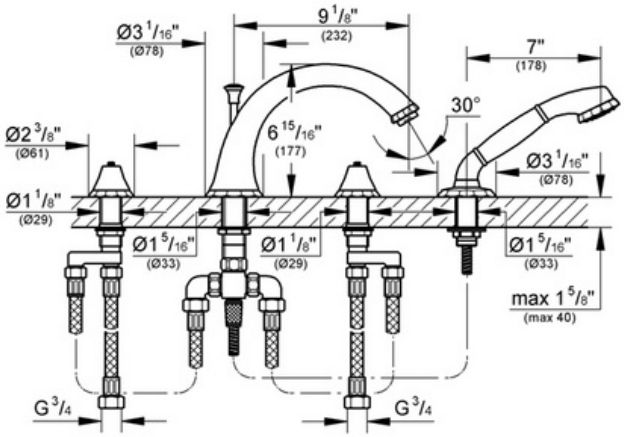

GROHE America, Inc 241 Covington Drive, Bloomingdale, IL 60108 | 630-582-7711 | Fax: 630-582-7722
GROHE Canada, Inc | 1230 Lakeshore Road East, Mississauga, Ontario | Canada L5E 1E9 | 905.271.2929 | Fax: 905.271.9494