NEWPORT BRASS®
Flawless Beauty. From Faucet to Finish.™

KIARA

Shower Trim

3-2534BP

Also 3-423, 3-424

Features

- Solid brass construction
- Face plate with ADA compliant traditional lever handle
- 2.0 gallons (7.6 liters) per minute maximum flow rate showerhead
- ADA compliant traditional lever and cross handle assembly options for control valve
- Intended for use with Newport Brass rough valve(s) as specified (Required Accessory)

Codes / Standards Compliance

Meets or exceeds the following at date of manufacture:

- ASME A112.18.1/CSA B125.1
- IAPMO/cUPC
- IPC
- ADA
- ICC/ANSI A117.1
- ASSE 1016
- Energy Policy Act of 1992
- All applicable US Federal and State material regulations

Colors / Finishes

- 10B: Oil Rubbed Bronze
- 15: Polished Nickel
- 15A: Antique Nickel
- 26: Polished Chrome
- Other: Refer to the Newport Brass catalog for additional color/finish options.

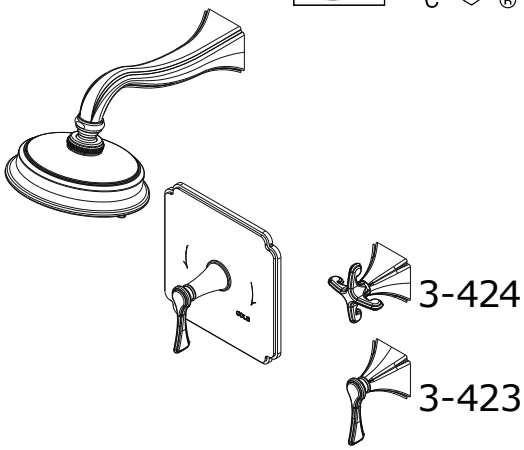

Specified Model

Model	Description	Colors / Finishes				
3-2534BP	Shower Trim	☐ 10B	☐ 15	☐ 15A	☐ 26	☐ Other
3-423	Shower System Control Valve Trim (Escutcheon/Handle)	☐ 10B	☐ 15	☐ 15A	☐ 26	☐ Other
3-424	Shower System Control Valve Trim (Escutcheon/Handle)	☐ 10B	☐ 15	☐ 15A	☐ 26	☐ Other

Required Accessory:

Trim(s), above, and Rough Valve(s), below, must be specified.

Application	Tub Only Valve*	Shower (or Tub) Valve	Tub & Shower Valve	Shower System Valve	Control Valve
Description	2-Cartridge Assembly	Balance Pressure (BP)	BP w/ Diverter	Thermostatic	Diverter (3/4 port)
Inlet/Outlet Size	1/2"	1/2"	1/2"	3/4"	1/2"
Part Number	☐ NA	☐ 1-594	☐ NA	☐ NA	☐ 1-618
Image		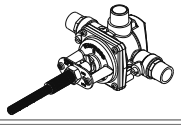			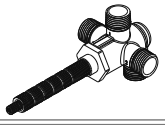

Product Specification:

Add "Color / Finish" suffix to Model number, below.

The single-control Shower Trim shall be made of solid brass construction. Shower Trim shall include showerhead with arm and flange and faceplate with ADA compliant handle. Showerhead shall have a maximum flow rate of 2.0 gallons (7.6 liters) per minute. Shower System Control Valve Trim(s) (Escutcheon/Handle) shall be ADA compliant when used with specified Shower System Control Valve. Shower Trim shall be Newport Brass Model 3-2534BP/____ and single-control Shower rough valve shall be Newport Brass Model 1-594. Shower System Control Valve Trim(s) (Handle/Escutcheon) shall be 3-42___/_____ (and 3-42___/_____) and Shower System Control Valve shall be 1-618.

t: 949.417.5207 | www.newportbrass.com
©2014 Brasstech, Inc.

3-2534BP

Product Dimensions *(units are in inches)*

NOTES:

1. CUT STEM TO DIMENSION SHOWN.
2. CUT ALL-THREAD 1/2" SHORTER THAN STEM.

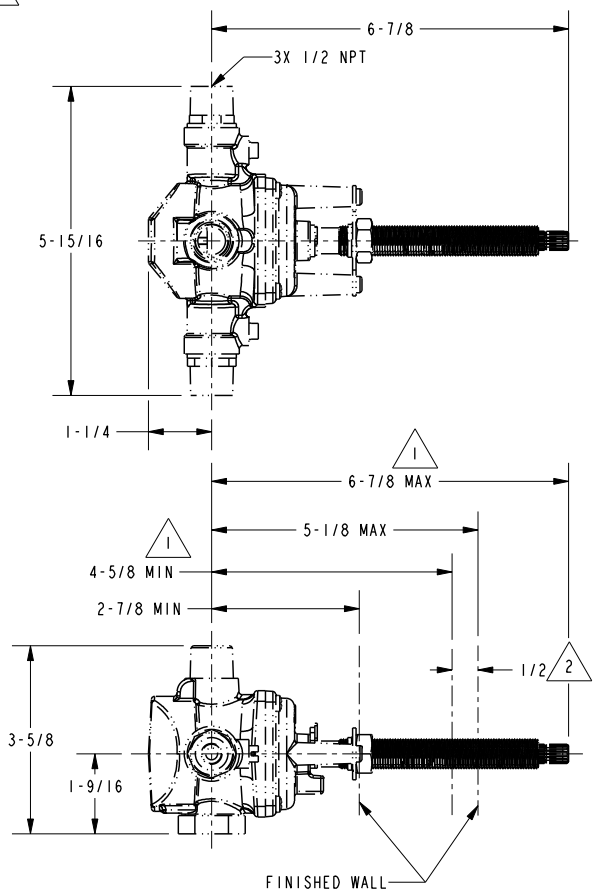

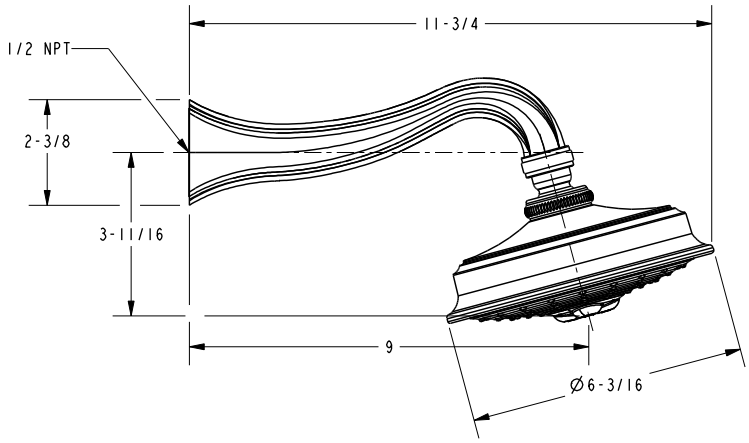

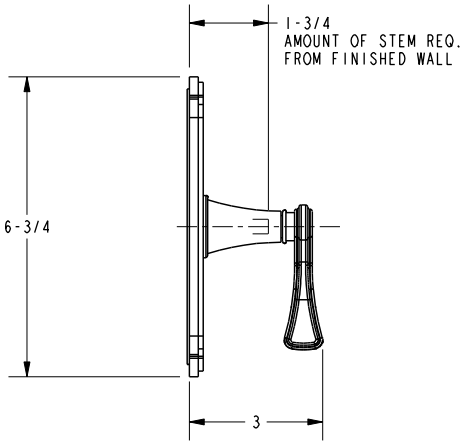

NEWPORT BRASS®
Flawless Beauty. From Faucet to Finish.™

t: 949.417.5207 | www.newportbrass.com

© 2014 Brasstech, Inc.