1-2100VT

Visu-Temp® *Pressure-Balancing mixing valve with Clear-Vue™ thermometer and adjustable stop screw to limit handle turn. Lever diverter with volume control for shower head. Euro-Flo single mode shower head with arm and flange. Tub spout. Polished chrome finish.*

Suffix X: *Integral service stops—allows water shut-off at valve for service*

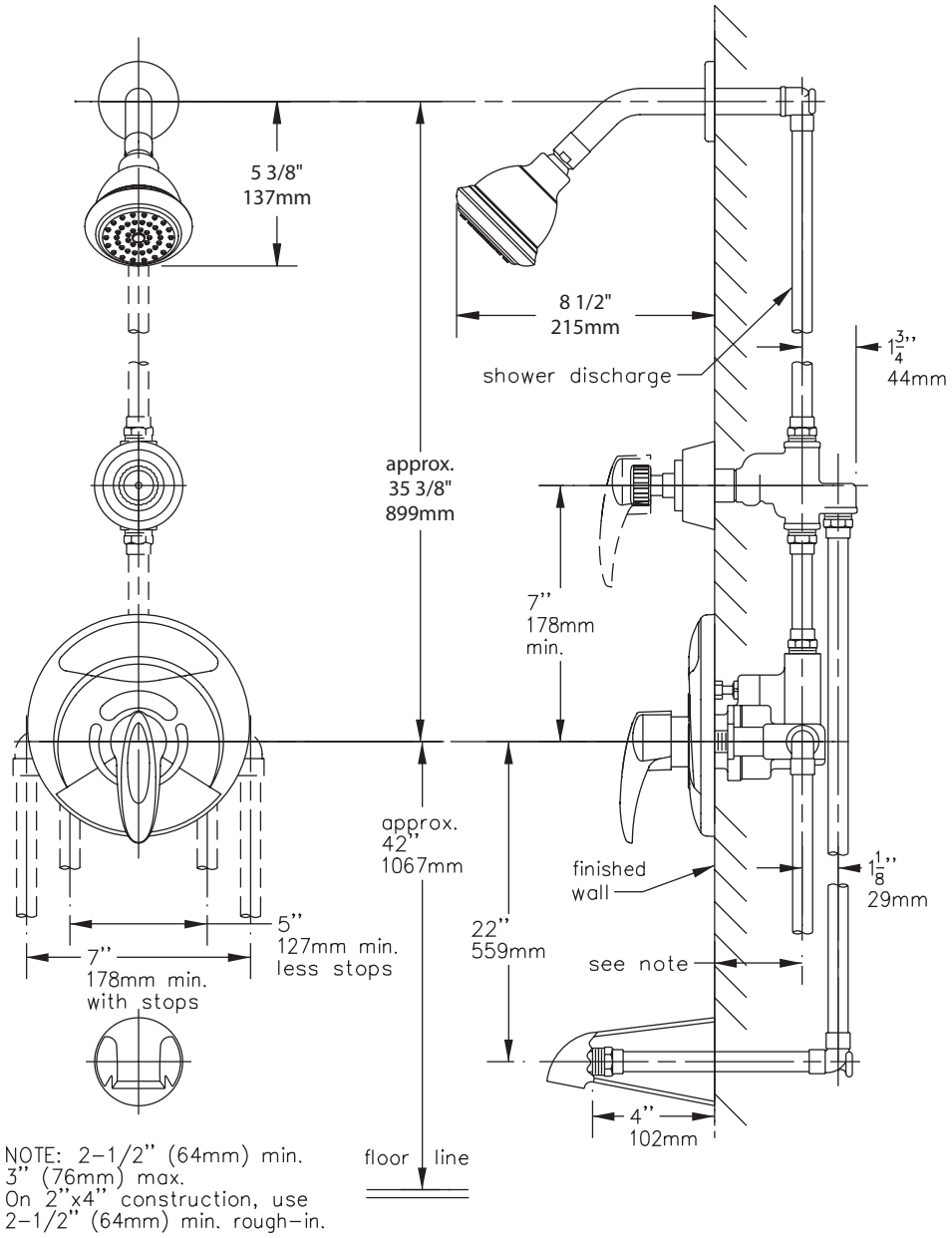

This drawing to be used for rough-in installation only. All floor to center dimensions optional. Concealed piping and fittings not furnished by manufacturer. For ADA compliance (Americans with Disabilities Act) consult ADAAG or your state regulations for proper product choice and mounting locations. For complete installation, adjustment and service information see installation instructions.

Symmons Industries, Inc. ▪ 31 Brooks Drive ▪ Braintree, MA 02184
(800) 796-6667, (781) 848-2250 ▪ Fax (800) 961-9621, (781) 843-3849
Website: www.symmons.com ▪ Email: customerservice@symmons.com

©2003, 2008 Symmons Industries, Inc. Printed in U.S.A. ▪ 050808

SYMMONS®
the smart choice™