25-2-231

Temptrol 2000™ Tub and Shower System

Temptrol 2000 Pressure Balancing mixing valve with built-in choke and adjustable stop screw to limit handle turn. Diverter tub spout, Super shower head with arm and flange.

Modifications:

Suffix X: Integral service stops—allows water shut-off at valve for service

Suffix LP: Loop style lever handle

Suffix LR: Lever handle

Suffix SS: Slip-on type tub spout in place of standard tub spout

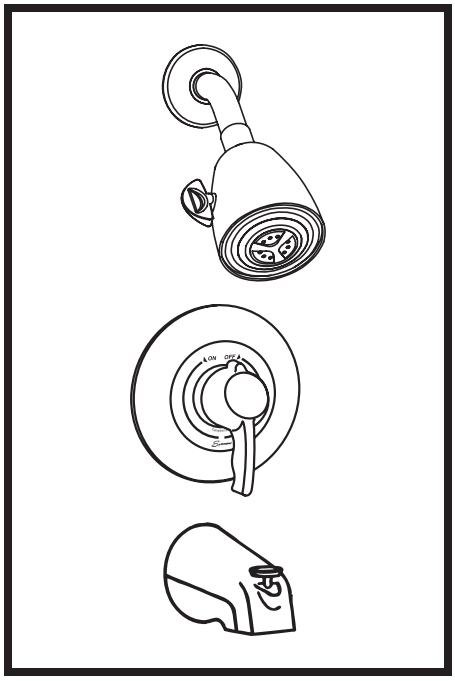

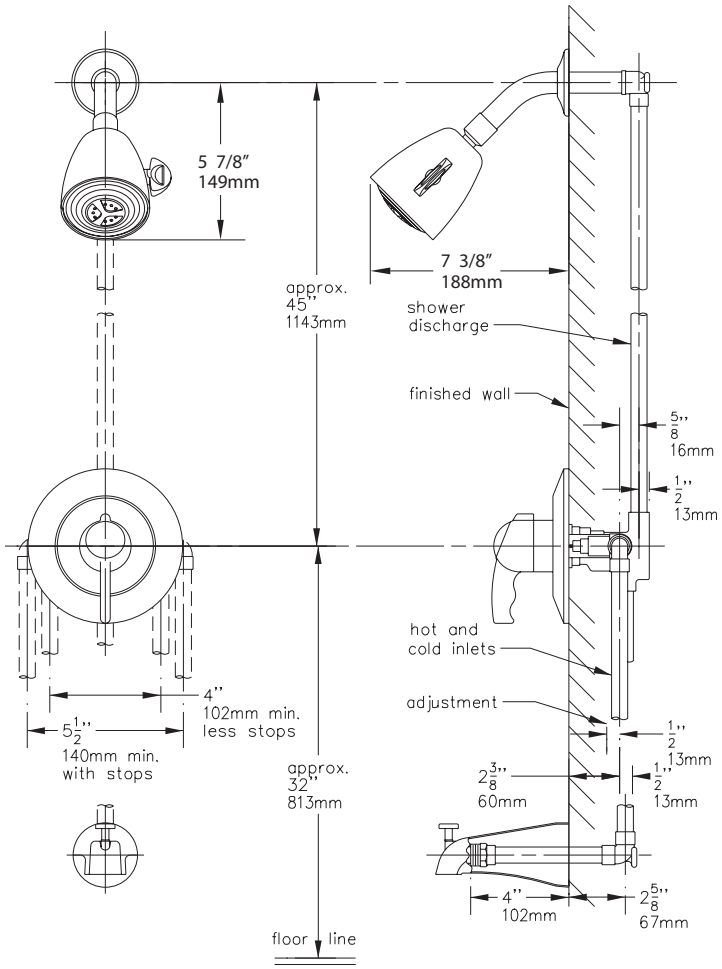

SYMMONS PRODUCTS MEET ANSI A112.18.1M, EPA '92 AND ALL KNOWN FLOW RATE REQUIREMENTS.
Shower Heads and Hand Showers 2.5 GPM (9.5 L/min)

Job/Location

. . . . . .

. . . . . .

Engineer

. . . . . .

. . . . . .

Contractor

. . . . . .

. . . . . .

This drawing to be used for rough-in installation only. All floor to center dimensions optional. Concealed piping and fittings not furnished by manufacturer. For ADA compliance (Americans with Disabilities Act) consult ADAAG or your state regulations for proper product choice and mounting locations. For complete installation, adjustment and service information see installation instructions.

Symmons Industries, Inc. ▪ 31 Brooks Drive ▪ Braintree, MA 02184
(800) 796-6667, (781) 848-2250 ▪ Fax (800) 961-9621, (781) 843-3849
Website: www.symmons.com ▪ Email: customerservice@symmons.com

SYMMONS®
the smart choice™

©2003, 2008 Symmons Industries, Inc. Printed in U.S.A. ▪ 042508