MOEN

Buy it for looks. Buy it for life.®

Illustrated Parts

90 DEGREE™
Two-Handle Wall Mount Faucet Trim

MODEL	HANDLE	FINISH
TS6730	Lever	Chrome
TS6730BN	Lever	Brushed Nickel

■ **Order by Part Number**

■ **Trim can be used with 9400 & 9700 valves**

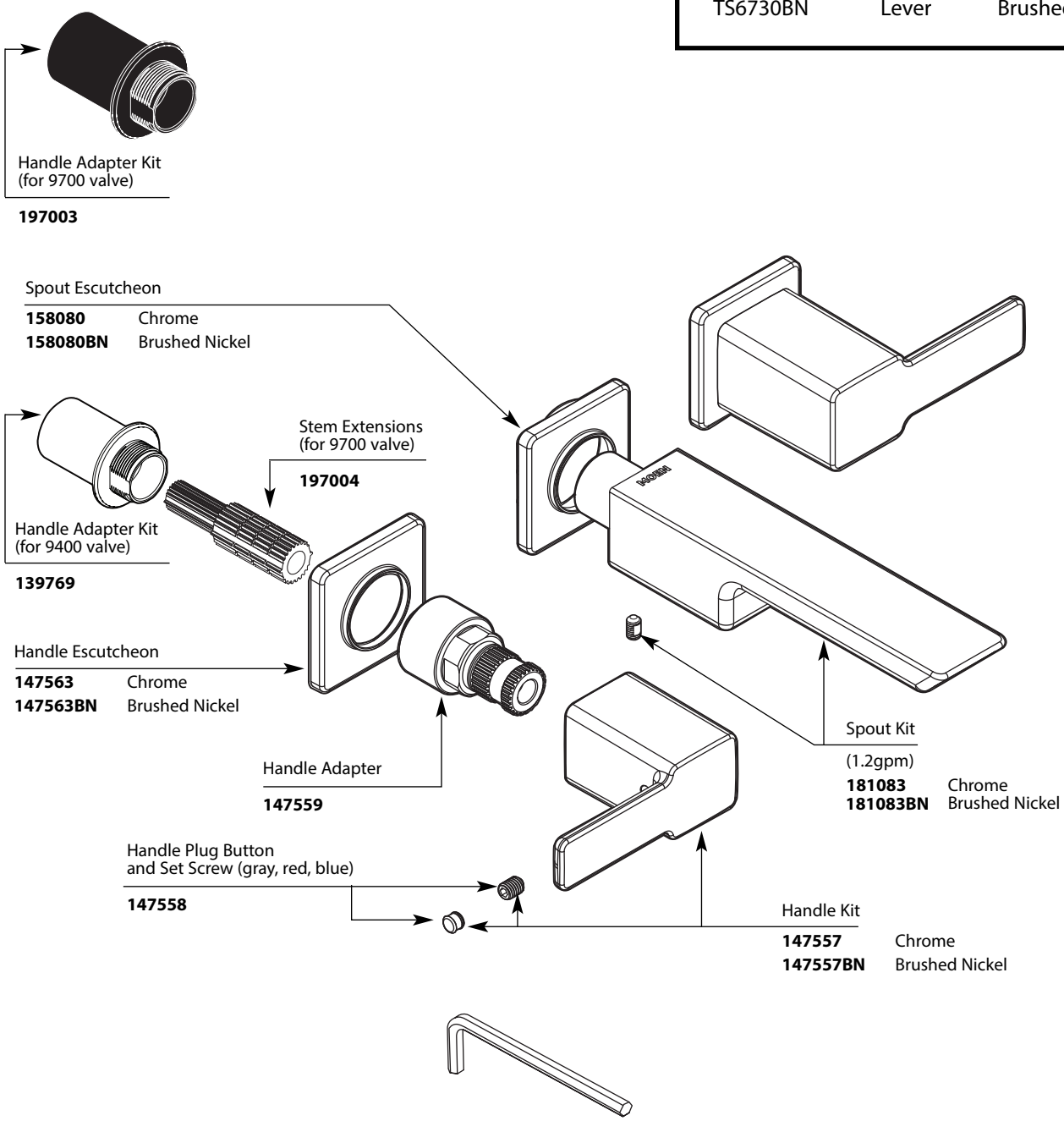

Rev. 12/15

TO ORDER PARTS CALL: 1-800-BUY-MOEN
www.moen.com

01/07/2016 EXP1292 5000X21394
Released 02