MOEN®

Specifications

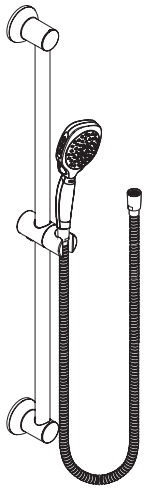

Four Function Handshower with Slide Bar

Models: S3870EP series

WaterSense Meets EPA Criteria
Certified by IAPMO R&T

DESCRIPTION
- Various finishes identified by suffix
- Handheld shower
- 69" double interlock spiral hose (metal)
- Double check valve in handle
- 30" slide bar with push button height selection

OPERATION
- Four functions: full coverage spray, targeted rinse/cleaning, heavy rinse and mist
- Handshower holder rotates to adjust angle of handshower

FLOW
- EP Suffix models are limited to 2.0 gpm (7.6 L/min) max at 80 psi for products manufactured prior to June 30, 2018. EP suffix models manufactured after June 30, 2018 are limited to 1.75 gpm (6.6 L/min) max.

STANDARDS
- Designed and manufactured to comply with the applicable requirements of ASME A112.18.1/CSA B-125.1, ASSE 1014 and all applicable specifications referenced therein
- EP suffix models are listed and third party certified to Watersense®

WARRANTY
- Lifetime limited warranty against leaks, drips and finish defects to the original homeowner
- 10 year limited warranty when used in a multifamily installation
- 5 year limited warranty when used in a commercial installation

Visit www.moen.com/support for complete details and limitations

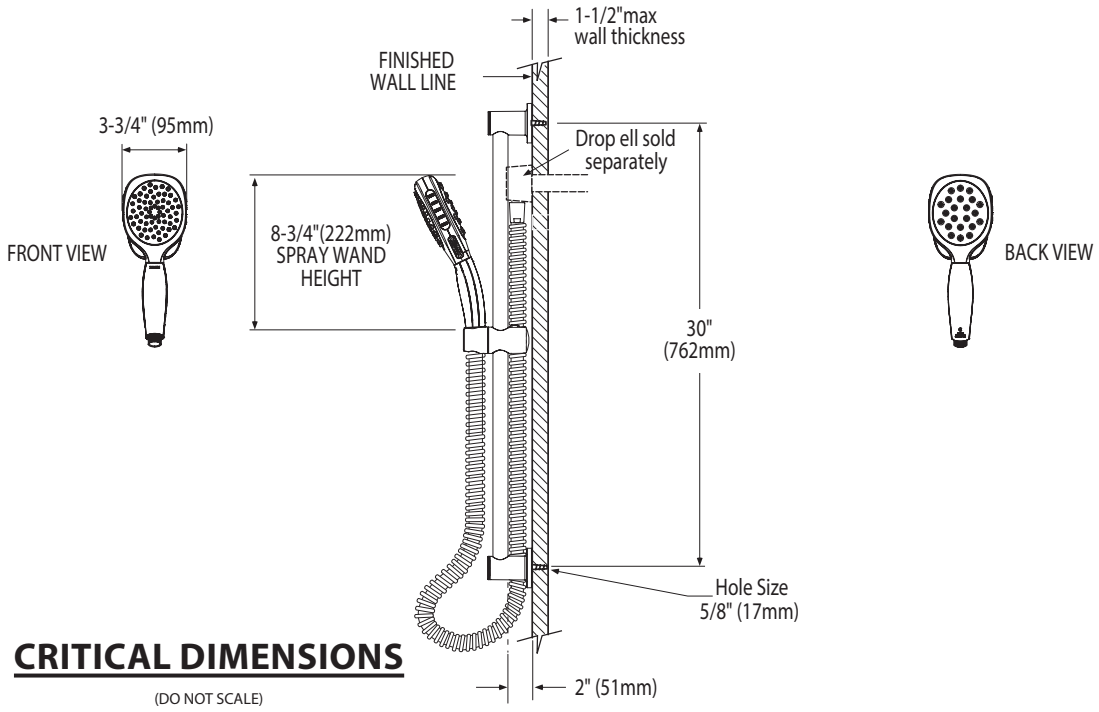

CRITICAL DIMENSIONS

(DO NOT SCALE)